INDUSTRIAS ELECTROMECANICAS GH, S.A.

Dpto. Comercial Tel.: (34) - 943 805 660 Fax: (34) - 943 888 721 E-mail: comercial@ghsa.com
Dpto. Export. Tel.: (34) - 943 160 625 Fax: (34) - 943 161 480 E-mail: export@ghsa.com
APDO. 27 - B° SALBATORE - 20200 BEASAIN (GIPUZKOA) - SPAIN WWW.GHSA.COM

GH CRANES

NEW OPEN WINCH HOIST

GH CRANES

ISO 9001 CERTIFIED

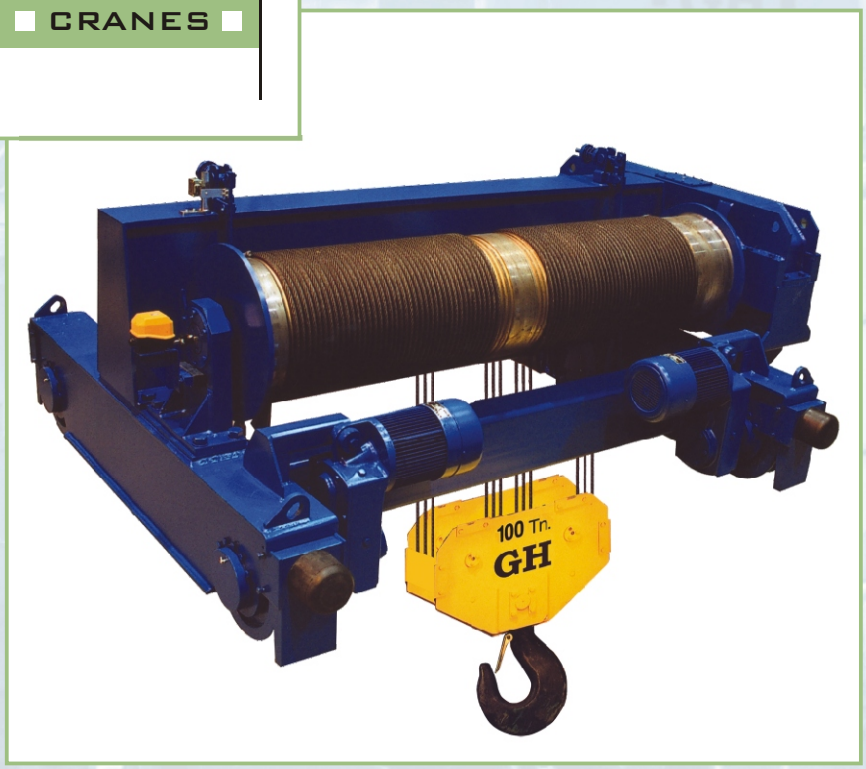

LLOYD'S REGISTER QUALITY ASSURANCE · ISO9001 · UKAS QUALITY MANAGEMENT 001

Certificate No. E199326

CE

E-MAIL: EXPORT@GHSA.COM

WWW.GHSA.COM

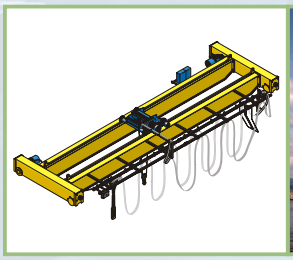

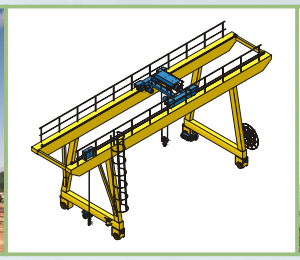

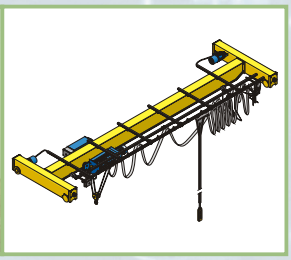

GH

Ref.: 1.000 / 02.03

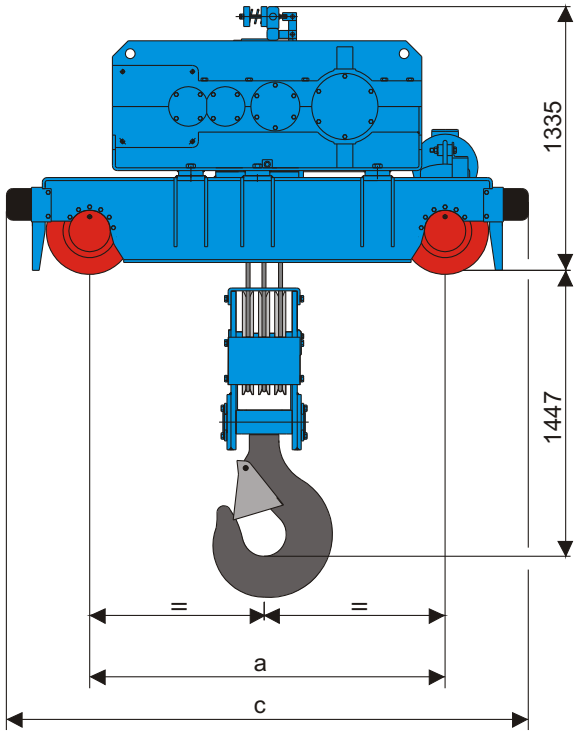

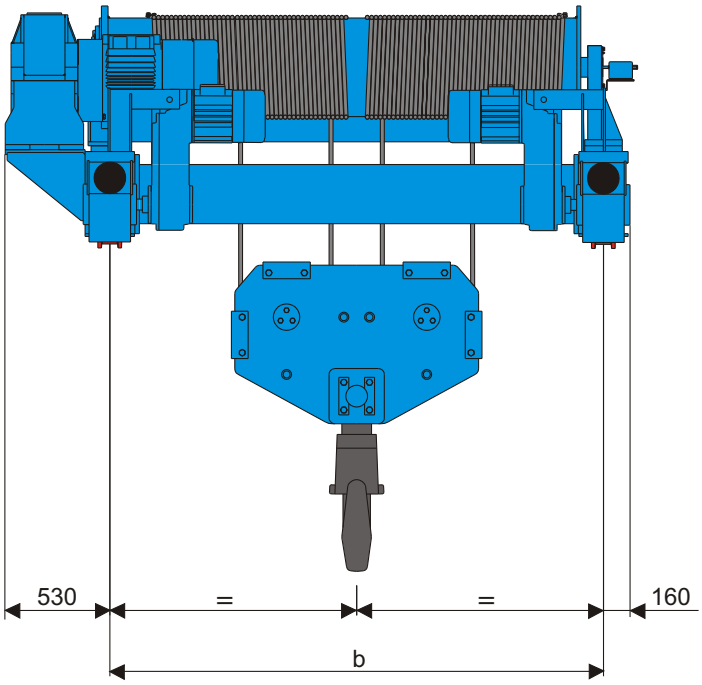

MAIN CHARACTERISTICS (20 - 100 Tn)									
LIFT. CAPACITY (Tn)	REEVING	TYPE	WORKING GROUP	LIFT. MOTOR POWER (Kw)	LIFT. SPEED (m/min)	HOL (m)	DIMENSIONS		
							a	b	c
100	12/2	GHG-4T	M5	40	2	10	1800	2500	2650
						16	1800	3550	2650
						22	1800	4500	2650
						25	1800	5000	2650
80	12/2	GHG-4T	M6	40	2.5	10	1800	2500	2650
						16	1800	3550	2650
						22	1800	4500	2650
						25	1800	5000	2650
63	8/2	GHG-4T	M5	40	3	10	1800	2000	2650
						15	1800	2500	2650
						20	1800	3150	2650
						28	1800	4000	2650
50	8/2	GHG-4T	M6	40	4	10	1800	2000	2650
						15	1800	2500	2650
						20	1800	3150	2650
						28	1800	4000	2650
40	8/2	GHG-4T	M7	40	5	10	1800	2000	2650
						15	1800	2500	2650
						20	1800	3150	2650
						28	1800	4000	2650
32	4/2	GHG-4T	M5	40	6	12	1800	1500	2650
						17	1800	1800	2650
						21	1800	2000	2650
						25	1800	2240	2650
25	4/2	GHG-4T	M6	40	8	12	1800	1500	2650
						17	1800	1800	2650
						21	1800	2000	2650
						25	1800	2240	2650
20	4/2	GHG-4T	M6	40	10	12	1800	1500	2650
						17	1800	1800	2650
						21	1800	2000	2650
						25	1800	2240	2650

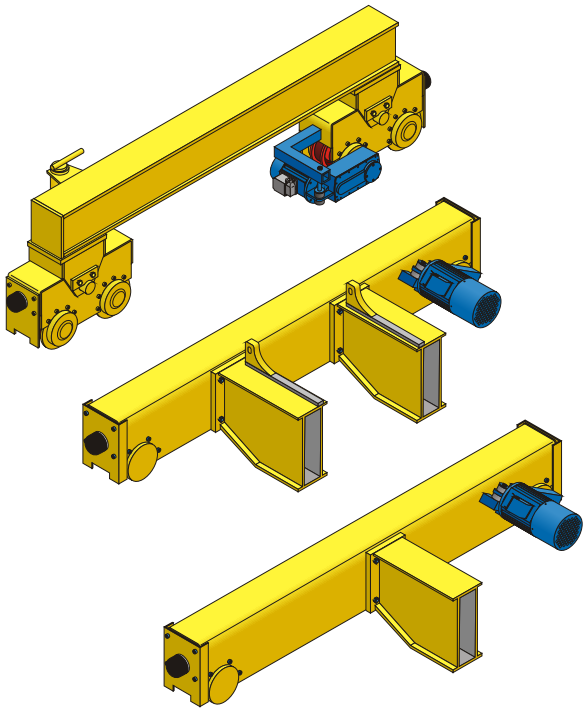

anfora.net